RWD 4 & 5 Speed R4A51 / V4A51 / R5A51 / V5A51

MITSUBISHI

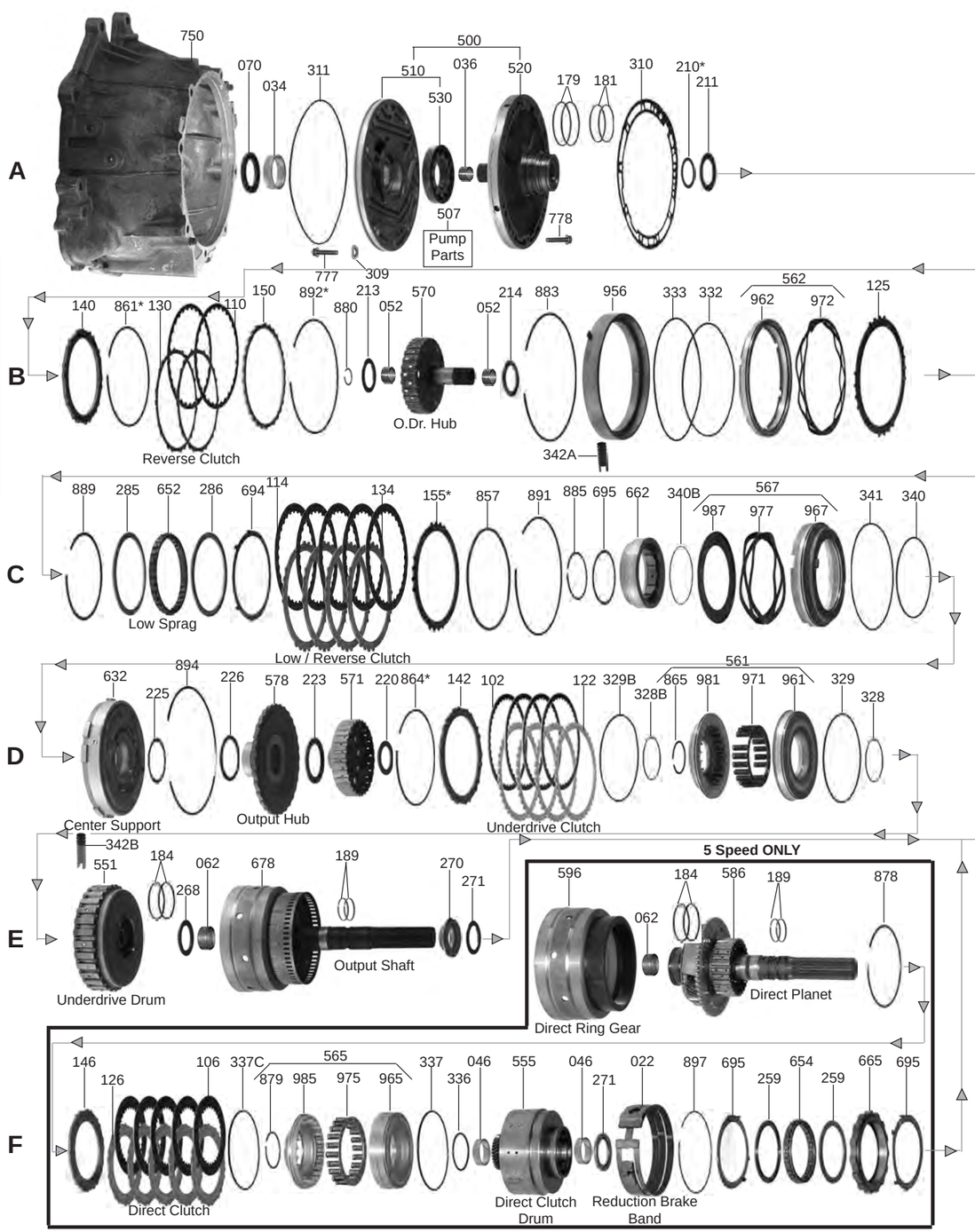

000 P&R Kits

002 Overhaul Kits

004 Master L/ Steels Kit

006 Master W/ Steels Kit

030 Bushing Kit

119 Friction Module

400 Technical Manual

420 Solenoid Kit

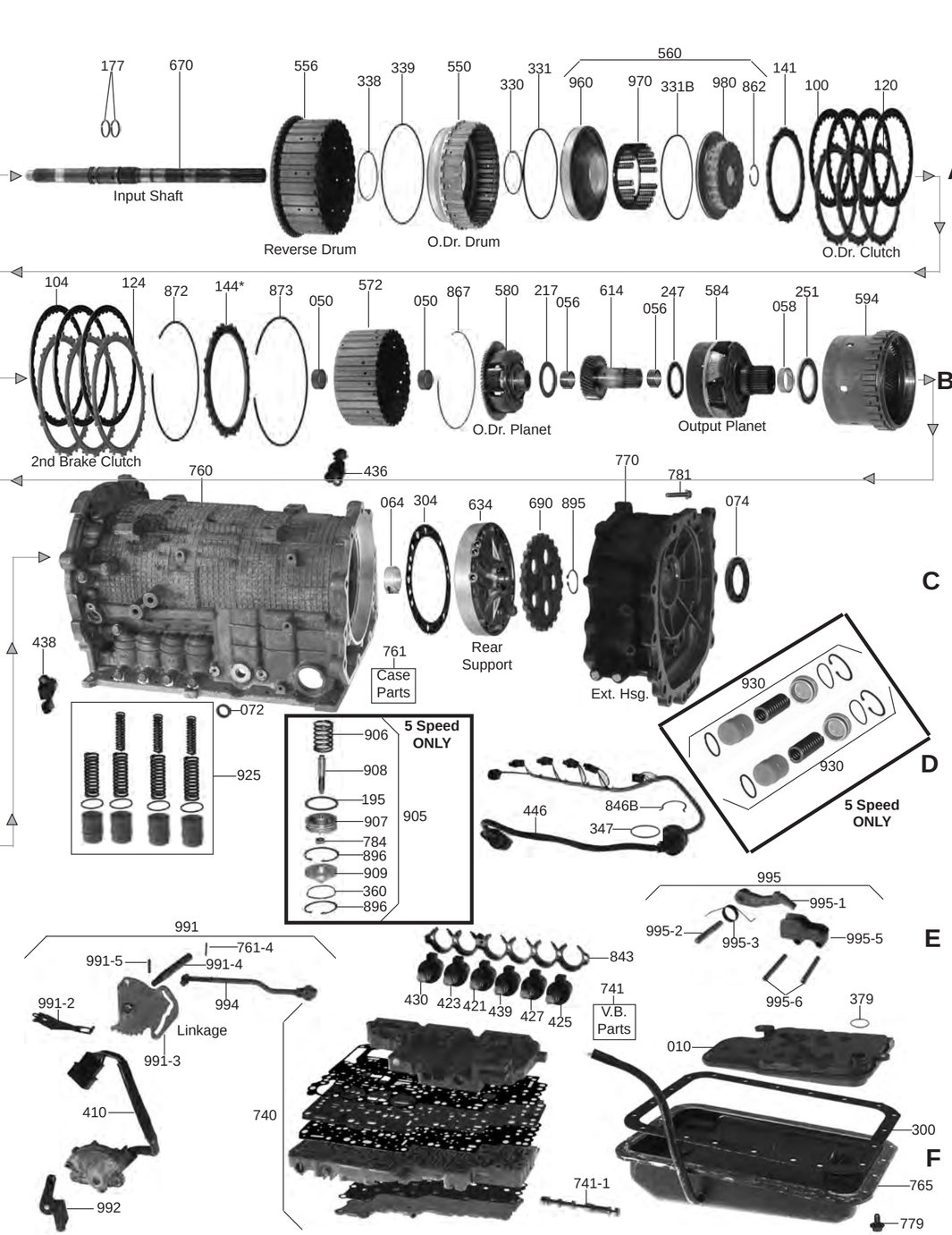

MITSUBISHI

142 1-800-940-0197 © Whatever It Takes Transmission Parts. Inc.